Product Name: VK-2123
Process: Dye Sublimation
Material: Polyknit 9
Scale: 50%
Effective Date: 10/12/2015 NDW

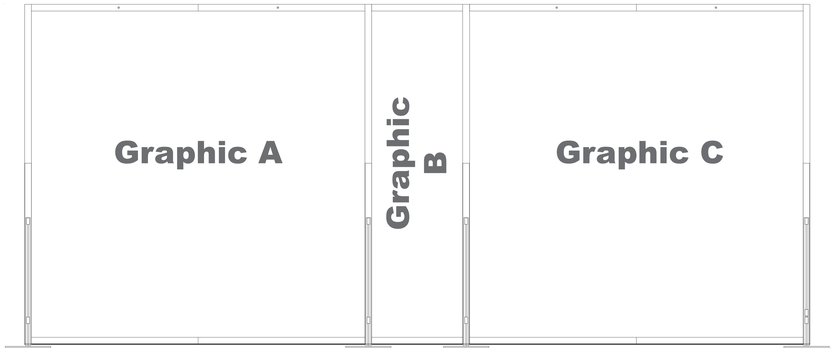

LIVE AREA INSIDE DOTTED LINES

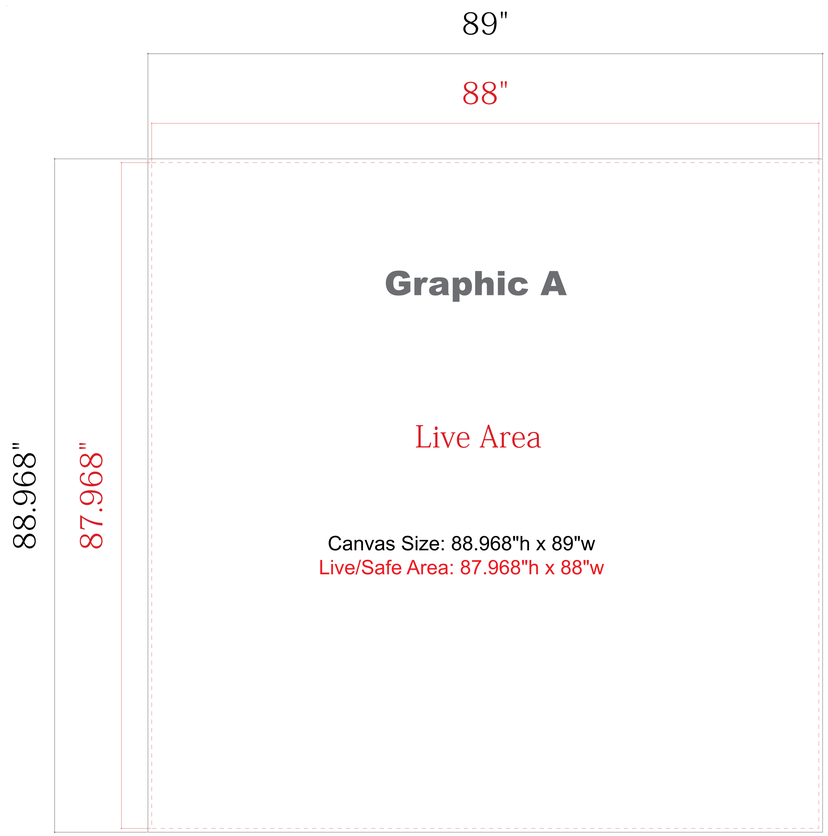

Main Backwall Graphic
Left Side
Qty. 1
Sew 1/2" Hook Velcro to Face/ Perimeter

Main Backwall Graphic
Center
Qty. 1
Sew 1/2" Hook Velcro to Face/ Perimeter

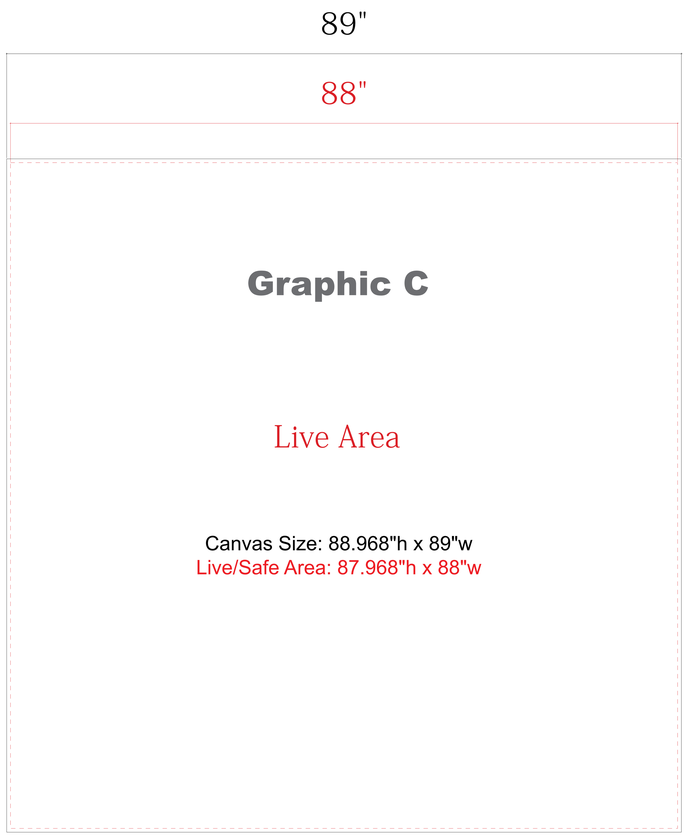

Main Backwall Graphic
Right Side
Qty. 1
Sew 1/2" Hook Velcro to Face/ Perimeter

****NOTE**: Test frames may be required for guaranteed fitting of graphics**

NOTE: Graphic files must be @ 150 dpi Finished Size. ***DO NOT*** send Flattened Files. Production can not manipulate the content, proportion or color of these files.

Product Name: VK-2123
Process: Direct Print
Material: Sintra / Acrylic
Scale: 50%
Effective Date: 10/12/2015 NDW

Convex Graphic Wings
1/8" Sintra / Acrylic
Left Side
Qty. 1 Upper, 1 Lower

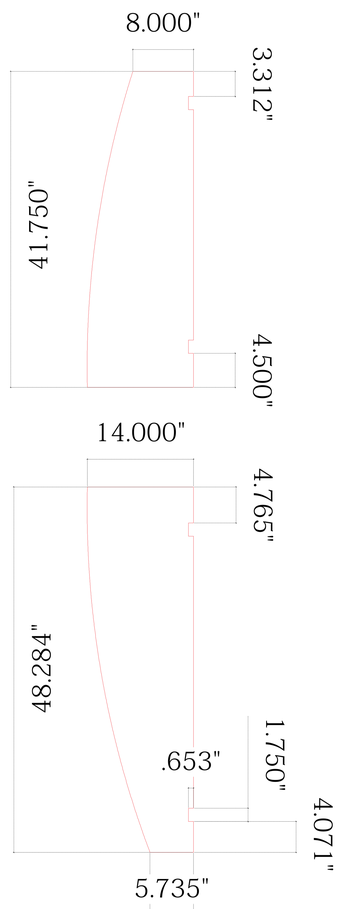

Convex Graphic Wings
1/8" Sintra / Acrylic
Right Side
(Mirror Left Side)
Qty. 1 Upper, 1 Lower

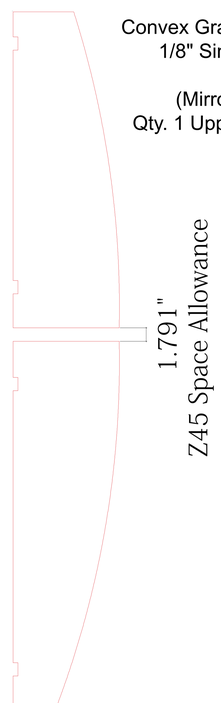

Direct Print Header Graphic
1/4" Sintra / Acrylic
Qty. 2

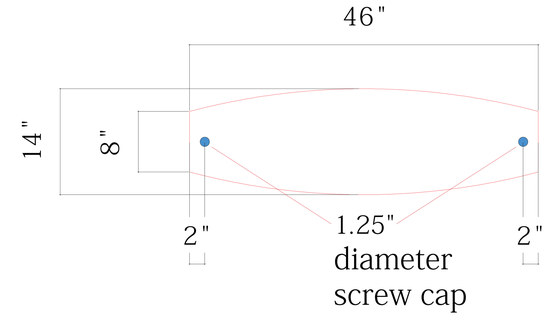

Backwall Workstation Facade
Direct Print Graphic
1/4" Sintra / Acrylic
Qty. 4

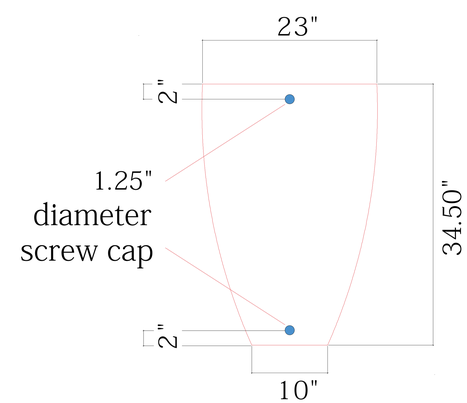

****NOTE**: Test frames may be required for guaranteed fitting of graphics**

NOTE: Graphic files must be @ 150 dpi Finished Size.
DO NOT send Flattened Files. Production can not manipulate the content, proportion or color of these files.